INVITATION TO BID NO. 16-612-031
Wise County, Texas

BID TITLE: *Various Metal-Barn Repair*

SEALED BIDS WILL BE RECEIVED UNTIL: *10:00 a.m. central time, Thursday, September 29, 2016*

RETURN BIDS TO:

Wise County Asset Control Office
400 W Walnut, Decatur, or
P.O. Box 952, Decatur, TX 76234

All bids must be submitted in a sealed envelope on the enclosed bid form and received on or before the time specified above. The bid envelope must have a return address in the upper left hand corner and the bid name and number in the lower left hand corner.

SCOPE

Wise County is now accepting formal sealed bids for a contract for the purchase of various metal as listed.

The order for this contract will be placed on the date of award pending receipt of HB1295(see information under general conditions).

SPECIFICATIONS

It is the intent of these specifications to describe metal suitable for use in barn repair. See Attachment A for reference only. Only materials listed are needed. No labor needed.

Any catalog, brand name, or manufacturer's reference used in describing an item is merely descriptive and not restrictive unless otherwise noted, and is used only to indicate type and quality of material. Bidders must state exactly what they intend to furnish. If bidder takes no exception to specifications or reference data, he will be required to furnish items as specified in the bid.

See bid form.

Items are to be delivered to Precinct 2 Barn, 197 S FM 1655 Alvord TX.

Materials mentioned in this bid must comply with the standard structural steel rating of the American Society of Testing and Materials.

The County reserves the right to inspect the product for quality and compliance with the specifications.

If award is made, the Commissioners' Court may make award in whole, by category, or by item as determined to be the best value for the County.

ESTIMATED QUANTITIES

Bid form includes the estimated quantities and amounts to be purchased on date of award.

GENERAL CONTRACT TERMS AND CONDITIONS

The contract price for this service must include all ancillary costs associated with the service.

The bidder reserves the right to charge any price desired as long as it does not exceed the bid price.

All invoices will be paid on a net 30 basis. No late fees or interest charges are to be assessed against the county.

Invoices must show the address and department where the service was required and the bid number. Each department/precinct must be invoiced separately.

Invoices must be sent to:

Wise County Auditor's Office
P.O. Box 899
Decatur, TX 76234
940-627-5744

Funds for payment on this contract have been provided through the Wise County budget approved by Commissioners' Court for this fiscal year only. State of Texas statutes prohibit the obligations and expenditure of public funds beyond the fiscal year for which a budget has been approved. Therefore, anticipated orders or other obligations that may arise past the end of the current Wise County fiscal year shall be subject to budget approval. The fiscal year for the County extends from October 1st of each calendar year to September 30th of the next calendar year.

The bidder must provide pricing (unit or lump sum) as requested on the bid form. Prices quoted shall remain firm for the period of the contract and shall include the cost of installation if required in the specifications, shipping, and delivery of item to the designated point unless pickup is required and stated in the bid and shall not include Federal or State of Texas sales, excise and use taxes.

The undersigned affirms they have familiarized themselves with the local conditions under which the work is to be performed and have satisfied themselves of matters that may be incidental to the work before submitting a bid.

Bidders must submit their bids on the attached forms and they must be originally signed.

Bids not submitted on these forms will be summarily disqualified. **NO 3 RING BINDERS**

Faxed or emailed bids will not be accepted.

By submitting and signing the attached bid forms, each bidder is indicating that he has read and understood the instructions, terms, conditions, specifications, and invitation to bid and agrees to comply with and be bound by its precepts. Submission of a bid form shall constitute an offer on such terms that shall remain open and irrevocable until such time as a bid submitted on same has been accepted by the

Commissioners' Court of Wise County, Texas. Acceptance of same by the Court shall create a contract between the parties based upon the instructions, terms, conditions, specifications, invitation to bid, and the bid forms. **Award notice will include information on form 1295 disclosure that must be completed and returned prior to any bid award being considered final, contract being signed by Wise County, any Purchase Order being issued by Wise County, or any notice to proceed with work being issued by Wise County. Wise County cannot advise on the form 1295. As this is a new law and form, if you have questions, the Texas Ethics Commission implemented the law and generated the form so we would suggest calling them at 512-463-5800 or https://www.ethics.state.tx.us.**

Continuing non-performance of the vendor in terms of specifications shall be basis for termination of the contract by Wise County. Wise County shall not pay for work, equipment, or supplies that are unsatisfactory. Vendors will be given a reasonable opportunity before termination to correct the deficiencies. However, this shall in no way be construed as negating the basis for non-performance termination.

A Conflict of Interest Questionnaire and explanation has been included with this bid packet. If you have any questions about compliance, please consult your own legal counsel. Compliance is the individual responsibility of each individual, business, or agent who is subject to the laws filing requirements. If you are required to file a Conflict of Interest Questionnaire, the original signed questionnaire should be filed with the County Clerk's Office. **DO NOT INCLUDE THIS FORM WITH THE BID PACKET. IT WILL NOT BE FILED BY ASSET CONTROL.**

Wise County Clerk
P.O. Box 359
200 N Trinity
Decatur, TX 76234
940-627-3351

The bid analysis will include compliance to bid specifications, past performance with vendor, warranty, delivery time, and the overall cost to Wise County. Wise County reserves the right to consider deviations from these specifications. All bids meeting the intent of this invitation to bid will be considered for award. Bidders taking exception to the specifications, or offering substitutions, shall state these exceptions in the section provided or by attachment as part of the bid. The absence of such a list shall indicate that the bidder has not taken exceptions and shall hold the bidder responsible to perform in strict accordance with the specifications of the invitation. Wise County Commissioners' Court reserves the right to accept any and all or none of the exception(s)/substitution(s) deemed to be in the best interest of the County.

Award, if any, will be made to the responsible bidder(s) submitting the lowest and/or best bid price(s) for the item(s) as specified and meeting all the requirements of the invitation to bid. All information required by the bid form must be furnished. To be determined will not be considered an answer. It should be understood by all bidders that Wise County reserves the right to reject bid submissions that do not meet the requirements of the invitation to bid and that do not contain all of the documentation detailed below.

1. Bid form completed in its entirety and originally signed
2. Affidavit

Wise County reserves the right to accept and/or reject any and all bids or proposals for any reason whatsoever.

Wise County reserves the right to waive any minor technicalities.

ADDITIONAL NOTICE TO BIDDERS

BY RESOLUTION PASSED ON FEBRUARY 23, 2004, THE WISE COUNTY COMMISSIONERS' COURT RESERVES THE RIGHT TO REFUSE TO CONSIDER ANY BID SUBMITTED BY ANY PERSON OR ENTITY THAT IS CURRENTLY INDEBTED TO WISE COUNTY.

APPLICABLE DATES AND TIMES

The bids will be received in the Wise County Asset Control Office at 400 W Walnut in Decatur, Texas, until 10:00 a.m. central time, Thursday, September 29, 2016.

The Wise County Asset Control Office will date and time receive stamp all bids upon their receipt.

The County assumes no responsibility for the timely delivery of any bid by anyone or any entity.

Those bids that come in after the time set for bid opening will be summarily disqualified and will be left unopened unless it is necessary to open the bid envelope to return a bid bond or check.

No modifications may be made to bids after the time set for the bid opening. Bids may be withdrawn up to, but not after, the time set for bid opening.

The bids will be opened and publicly read in the County Asset Control Office at 10:00 a.m. central time, Thursday, September 29, 2016.

Bids will be considered for award in Wise County Commissioners' Court at the next regularly scheduled Commissioners' Court at the location posted on the agenda. All bidders are encouraged to be present at the bid opening and the bid awarding to defend and answer questions about their bid.

If due to inclement weather or any reason beyond our control the Asset Control Office is closed on the scheduled bid opening date or time, the bid opening date and time will be the same time on the first day the office is reopened for business. Should this be after the original Commissioners' Court date set for award, the award will be considered in the next scheduled Commissioners' Court after the opening.

Any explanation desired by a bidder regarding the meaning or interpretation of the invitation for bids, drawings, specifications, etc., must be requested in writing and with sufficient time allowed for a reply to reach bidders before the submission of their bids. Any interpretation made will be in the form of an addendum of the invitation for bids, drawings, specifications, etc., and will be furnished to all prospective bidders. Receipt of all addenda must be acknowledged by the bidder by signing and returning the addenda with the bid. All addenda will be bound with and made a part of the contract documents. Oral explanations or instructions given before the award of the contract will not be binding. Written requests shall be emailed to: Diana Alexander at Diana.alexander@co.wise.tx.us.

TITLE

The bid must be submitted in a sealed envelope with the following written on the outside lower left-hand corner of the envelope

"VARIOUS METAL-BARN REPAIR, BID NO. 16-612-031 "

The bid envelope must also have the bidder's complete return address in the upper left-hand corner of the outside of the envelope.

Attachment A

EIKON

DESIGNING CONFIDENCE

PROJECT PRECINCT 4 BARN ROOF RETROFIT

PROJECT #

NAME KEATEN CLANEY

DATE 4/8/16 **SHEET** 1 **OF** 1

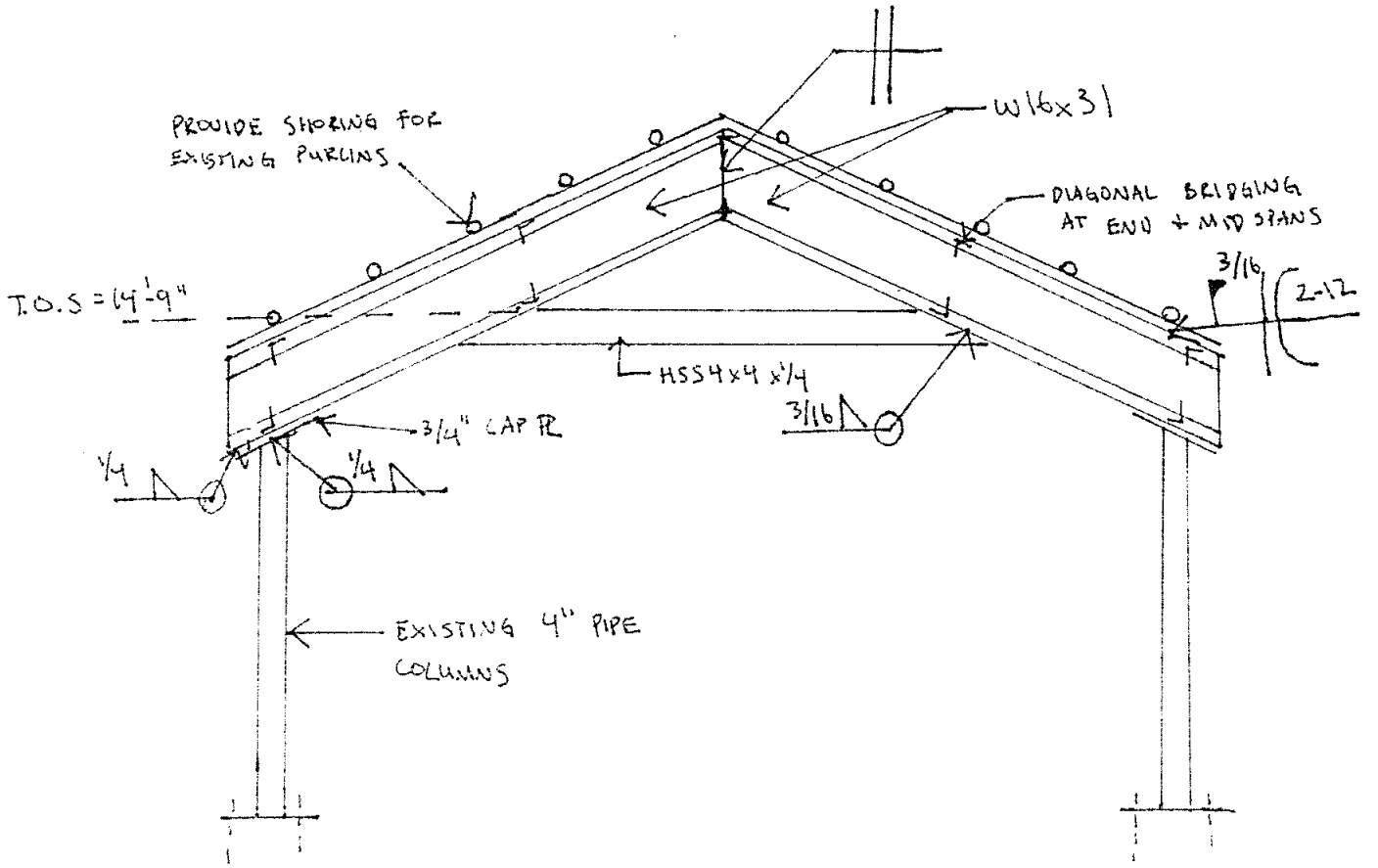

STATE OF TEXAS
JUSTIN R. DAVIDSON
101042
LICENSED
PROFESSIONAL ENGINEER
4/8/16

WISE COUNTY, TEXAS
VARIOUS METAL-BARN REPAIR
BID NO. 16-612-031

Bidder's Name: Norton Metals

Address: 1350 Lawson Rd

Mailing Address: Same

City/State/Zip: Ft. Worth, Texas 76225

Phone Number: (817) 234-0117 Fax Number: 817-234-0101

Person to Contact: Patricia Polak

Email: ppolak@nortonmetals.com

All prices must include delivery to location as specified in the bid.

Order to be place on date of award pending receipt of HB1295.

If award is made, the Commissioners' Court may make award in whole, by category, or by item as determined to be the best value for the County.

Prices MUST be lump sum for each line item.

18 Ibeams W16x31 27'long $ 6847.20

9 HSS 4"x4"x1/4" square tubing $ 1213.20
24

Purchase Price must include any and all charges. Any extraneous fees or charges that will or may be invoiced to the County must be disclosed on this form. This includes, but is not limited to freight, fuel or travel surcharges, overtime rate, etc.

Signature: [signature]

Typed Name and Title: Patricia Polak

Date: 9-16-16

Bid: Various Metal-Barn Repair, 16-612-031

STATE OF TEXAS (

COUNTY OF WISE (

AFFIDAVIT

BEFORE ME, the undersigned authority, a Notary Public in and for the State of Texas, on this day personally appeared Patricia Polak known to me to be the person whose name is subscribed to the following, who, after having first duly sworn, upon oath, did depose and say:

That the foregoing bid submitted by Patricia Polak / Norton Metals hereinafter called "Bidder" is the duly authorized agent of said company and that the person signing said bid has been duly authorized to execute the same. Bidder affirms that they are duly authorized to execute this contract, that this company, corporation, firm, partnership or individual has not prepared this bid in collusion with any other Bidder. The contents of this bid as to prices, terms or conditions of said bid have not been communicated by the undersigned nor by any employee or agent to any other person engaged in this type of business prior to the official opening of this bid.

I am the affiant in the above-mentioned bid. I have personal knowledge of the facts contained in the foregoing statement and they are true and correct to the best of my knowledge and belief.

FURTHER AFFIANT SAYETH NAUGHT.

Name and Address of Bidder:

Bidder: Norton Metals

Signed by: Patricia Polak

Address: 1350 Lawson Rd. Ft Worth TX 76131

Telephone: 817-234-0117 **Date:** 9-21-16

NOTARY PUBLIC STATE OF TEXAS
SUE CARDWELL
ID #5118080
My Commission Expires
April 06, 2020

Patricia Polak
Affiant

Name: Patricia Polak

Title: Sales

SWORN TO AND SUBSCRIBED BEFORE ME THIS 21st day of September, 2016.

Sue Cardwell
Notary Public in and for the State of Texas

WISE COUNTY, TEXAS
ADDENDUM
VARIOUS METALS BARN REPAIR
BID NO. 16-612-031

The following information adds to, deletes, or changes information included in the original bid packet. **This acknowledgement must accompany bid and be originally signed.**

LENGTH FOR THE 4"X4"X1/4" SQUARE TUBING IS 24'

I acknowledge receipt of the above information.

signature

Sales

title

9-14-16

date

CERTIFICATE OF INTERESTED PARTIES

FORM 1295

Complete Nos. 1 - 4 and 6 if there are interested parties.
Complete Nos. 1, 2, 3, 5, and 6 if there are no interested parties.

OFFICE USE ONLY
CERTIFICATION OF FILING

Certificate Number:
2016-122222

Date Filed:
10/10/2016

Date Acknowledged:
10/11/16

1 Name of business entity filing form, and the city, state and country of the business entity's place of business.

Norton Metals
Ft Worth , TX United States

2 Name of governmental entity or state agency that is a party to the contract for which the form is being filed.

Wise County Asset Control Office

3 Provide the identification number used by the governmental entity or state agency to track or identify the contract, and provide a description of the services, goods, or other property to be provided under the contract.

16-612-031
Various Metals-Barn Repair

4 Name of Interested Party	City, State, Country (place of business)	Nature of interest (check applicable)	
		Controlling	Intermediary

5 Check only if there is NO Interested Party. [X]

6 AFFIDAVIT

I swear, or affirm, under penalty of perjury, that the above disclosure is true and correct.

CATALINA RIOS
NOTARY PUBLIC STATE OF TEXAS
MY COMM. EXP. 03/23/2019
NOTARY ID 13016208-1

AFFIX NOTARY STAMP / SEAL ABOVE

Signature of authorized agent of contracting business entity

Sworn to and subscribed before me, by the said Patricia Black, this the 11th day of October, 20 16, to certify which, witness my hand and seal of office.

Signature of officer administering oath | Printed name of officer administering oath: Catalina Rios | Title of officer administering oath: Personal Banker